BM92A56MWV_EVK_001_ Schematic

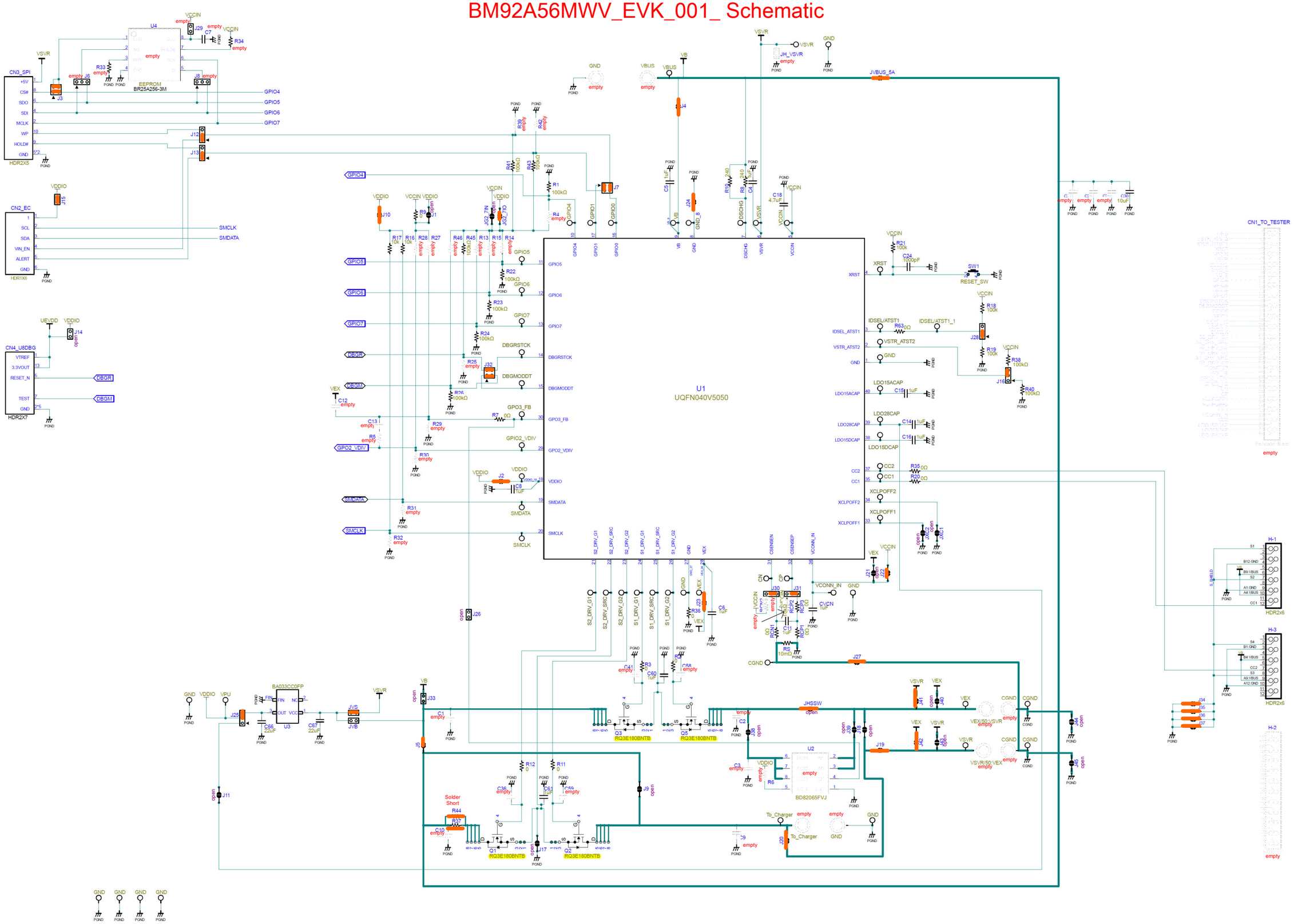

BM92A56MWV_EVK_001 BOM List

No.	Reference	Contents	Characteristic	Qty.
1	U1	TYPE-C USB PD Controller	5.0x5.0x1.0, UQFN40V5050A ROHM Part Number : BM92A56MWV	1
2	U3	3.3VLDO	6.5x9.5x2.5 TO252-3 ROHM Part Number : BA033CC0FP	1
3	Q1, Q2, Q3, Q5	MOS FET	N-ch 2.0×2.0×0.6, HUML2020L8 ROHM Part Number : RF4E110BN	4
4	Q3AB	MOS FET	N-ch 2.8×3.0×0.6, TSMT8 ROHM Part Number : QH8KA4	1
5	C4, C5, C6, C8, C14, C15, C16, C60, C62, CVCN	Cap	1uF, 1005, X5R, 25V	10
6	C30	Cap	10uF, 2012, X5R, 25V	1
7	C18	Cap	4.7uF, 1005, X5R, 6.3V	1
8	C66, C67	Cap	22uF, 2012, X5R, 25V	2
9	C24	Cap	1000pF, 1005, X5R, 25V	1
10	R2, R3, R7, R9, R11, R12, R20, R35, R36, R63, RCP3	Resistor	0Ω, 1005 ROHM Part Number : MCR01MRTJ000	11
11	R16, R17, RCP2, RCN2	Resistor	10kΩ, 1005 ROHM Part Number : MCR01MRTF1002	4
12	R1, R18, R19, R21, R22, R23, R24, R45, R26, R38, R40, R41, R43	Resistor	100kΩ, 1005 ROHM Part Number : MCR01MRTF1003	13
13	R8, R10	Resistor	240Ω, 6432 ROHM Part Number : LTR100JZPJ241	2
14	RS	Resistor	10mΩ, 6432 ROHM Part Number : LTR100JZPFU10L0	1
15	CN1	USB Receptacle	USB TYPE-C	1